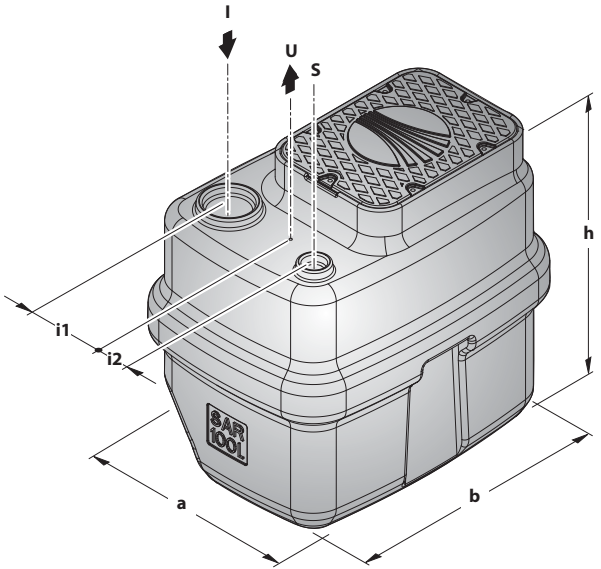

ТИП	ПАТРУБКИ			РАЗМЕРЫ mm					kg
	I	U	S	a	b	h	i1	i2	
SAR 100 - TOP1	Ø 100 mm	1¼"	Ø 50 mm	500	690	645	145	100	**28.0**
SAR 100 - TOP2									**28.7**
SAR 100 - TOP3									**30.1**
SAR 100 - TOP4		1½"							**33.6**
SAR 100 - TOP MULTI		1¼"							**32.9**
SAR 100 - RXm1									**28.2**
SAR 100 - RXm2									**29.3**
SAR 100 - RXm3									**29.6**
SAR 100 - ZDm 1A-E		1½"							**35.0**
SAR 100 - ZDm 1AR-E									**35.3**
SAR 100 - Dm8									**35.2**
SAR 100 - Dm10									**36.2**
SAR 100 - Dm15									**38.2**
SAR 100 - Dm18									**35.3**
SAR 100 - Dm20									**36.5**
SAR 100 - Dm30									**38.5**
SAR 100 - TOP-VORTEX		1¼"							**28.6**
SAR 100 - RXm 2/20									**29.6**
SAR 100 - RXm 3/20									**29.8**
SAR 100 - ZXm 1A/40		1½"							**35.2**